iFume Operating Manual

Visit www.purex.co.uk for more information.

PUREX
FUME EXTRACTION SYSTEMS

"The future of fume extraction"

822010-rev2

IMPORTANT

MACHINE MUST BE SET UP BEFORE USE

SEE PAGE 10

CONTENTS

	Page
EC declaration of conformity	4
Warnings	5
Routine maintenance	5
Installing the machine	6-7
Touchscreen Control System	8-9
Setting the machine for the first time	10
Setting special features	11
Filtration & changing filters	12-13
Warning and alarm signals	14
Troubleshooting	15-16
Terms & Conditions	17
Warranty registration	18

ATTENTION! CONSUMABLES & SPARES ATTENTION!

Filters

Should always be ordered in advance of requirement from Purex or your authorised local agent.

Replacement filter part numbers are shown on the corner of the original packaging and also on the label on the inside of the door cabinet. Please ensure you make a note here for future reference:

Spare parts

Prefilter Part Numbers	
Main Filter Part Numbers	

When requesting spares please quote the model and serial number of your system. These details can be found on the specification label at the rear of the machine or by pressing the support button on the touchscreen display.

EC DECLARATION OF CONFORMITY

EC Directive	2004/108/EC, 2006/95/EC, 2006/42/EC
Responsible Person	Mr Andrew Easey Purex International Limited QWP House Capitol Park Thorne Doncaster DN8 5TX United Kingdom
Apparatus	All Purex Fume Extraction Systems
Technical Construction File	Purex Engineering File – Issue 2
Date	18th February 2016
Standards Applied	IEC 60950-1: 2005 /A2:2013 EN 60950-1: 2006/A2:2013 UL 60950-1: 2007/R:2014-10 CAN/CSA C22.2 NO. 60950-1:2007/A2:2014-10 EN 61000-6-2: 2005 EN 61000-6-3: 2007 + A1 :2011 FCC CFR 47: PART 15: B: 2014 ICES-003: 2012
Meeting the Requirements of	2004/108/EC EMC Directive 2014/35/EU Low Voltage Directive 2006/42/EC Machinery Directive

We certify that the Purex equipment stated above conforms with the protection requirements of the Council Directives indicated above on the approximation of the laws of the Member States relating to electromagnetic compatibility, low voltage and machinery safety.

Signed:	Andrew Easey
Position:	Operations Director
Date:	18th February 2016

WARNINGS

The use of filters other than those supplied by Purex or an authorised agent will invalidate any warranty, service contract and any LEV certification !

Non genuine Purex filter

- Always isolate the system from the mains power supply before opening any doors or lids.
- Disposable gloves and a dust mask are supplied with replacement filters. they should be worn when removing filters. Dispose used filters in the bag provided
- Filters are manufactured from non-toxic materials.
- Filters and prefilters are not re-usable and no attempt should be made to clean them.
- Used filters and prefilters should be disposed of in accordance with local laws and regulations. The company and its agents disclaim all liability and responsibility for any harm, damage, contamination or injury caused by inappropriate or unlawful disposal.
- Purex systems use high pressure pumps, which may cause inferior filters to burst, allowing hazardous fumes into the workplace. Do not use filters that have only been tested to BS3928, BS5295 or AS208C as these standards are flow checks only and are designed to test filters used in general dust extraction and air conditioning.
- Consult the local regulations concerning fume extraction systems, as these may be subject to requirements including; periodic checks by authorised agencies, re-issue of certificates of compliance or equivalents etc. Consult your supplier if in doubt.
- Consult your supplier for information on maintenance agreements that will ensure conformance to local regulations.

ROUTINE MAINTENANCE

Schedule

Primary maintenance is filter replacement, the machine control system will indicate when this is required. Filters should be replaced annually as a matter of course.

To ensure the smooth running of the extraction machine and associated equipment, please perform the following periodic checks:

Daily	- Visually check that the fumes are being drawn into the extraction point
	- Check the status of the display screen
Annually	- Change filters and consult your supplier for maintenance checks and/or certification

Positioning the machine

The machine should be as near to the process as possible with space allowed for the following access:

- Internal maintenance
- Control panel, replacing filters
- Exhaust air + cooling air, electrical connections, hose connection

Once in position, lock the two front castors by depressing the foot levers.

Hose connection

Incorrect connection or layout of hose can cause poor airflow, blockages and potentially dangerous build up of fume. Use the shortest length of hose possible and keep bends to a minimum. Your supplier can advise you of appropriate diameters and layouts of hose for your particular application.

- It is best practice to use the connection kit supplied.
- The use of small diameter pipe / hose or nozzles can reduce the performance of fume extraction systems and so should be avoided
- If a special connection kit or attachment is required please contact Purex or your local agent.

Ensure all connections are properly sealed and that there are no kinks in the hose. Once secured in position, connect the hose/s to the inlet/s on the machine either by pushing the hose onto the inlet or by using the connections supplied.

Electrical connection

Various connection methods are available to order. Prior to connecting the power supply, ensure that the voltage, frequency and power requirements are correct as shown on the label attached to the cabinet rear (Note - these are MAX values). It is important that the local supply is protected by a circuit breaker of the correct rating, and that the cabling and plug type used are similarly rated. Ensure the plug is accessible as a disconnect device.
For 800/800i series machines it is advised that a rotary isolator switch is used as a power disconnect device.

Interface Socket

When not in use this socket is protected by a screw-on cap.

Interfacing

To enable interfacing unscrew the interface socket cap and plug in the interface cable or remote ON/OFF switch. Connect the other end of the interface cable or remote ON/OFF switch to your related machine. Please note there is only one interface socket so an interface cable and the remote ON/OFF switch cannot be used together.

Warning

Use of unapproved cables or interfacing connections may invalidate your warranty.

The interfacing socket.

An interfacing cable

Remote ON/OFF switch (5m)

200
400

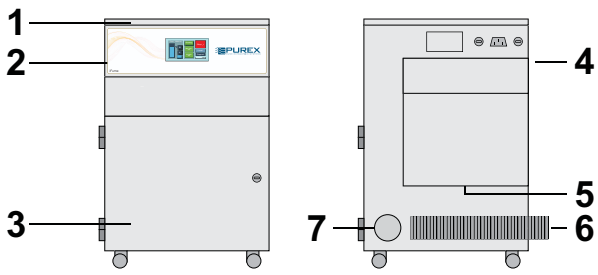

200i
400i
400i
PVC

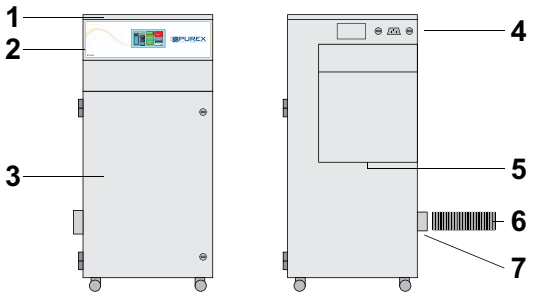

300i

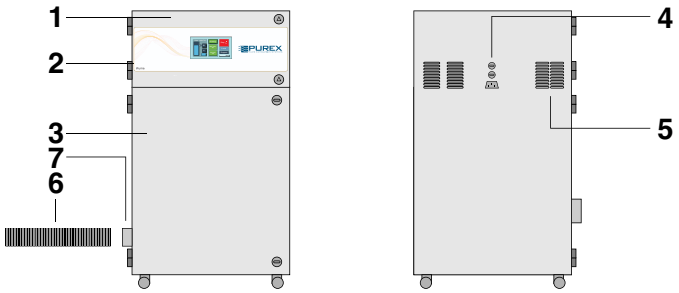

800i
800i
PVC

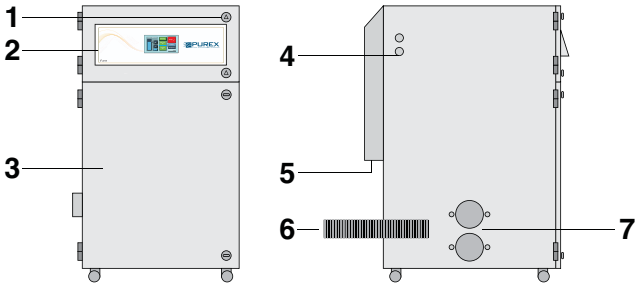

LEGEND:

1) Access to internal components
2) Control panel
3) Access to replace filters
4) Electrical connections and circuit breaker
5) Exhaust air + cooling air
6) Hose
7) Inlet

800

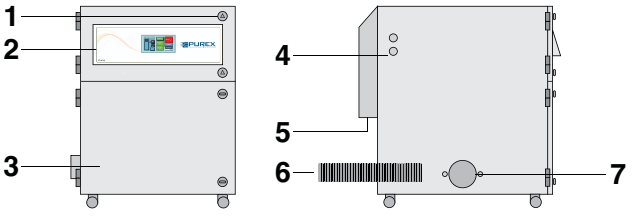

Touchscreen control system

The touchscreen control system gives the operator clear indication of machine and filter status at a glance, designed with ease of use in mind, making the iFume series usable by operators with minimal training.

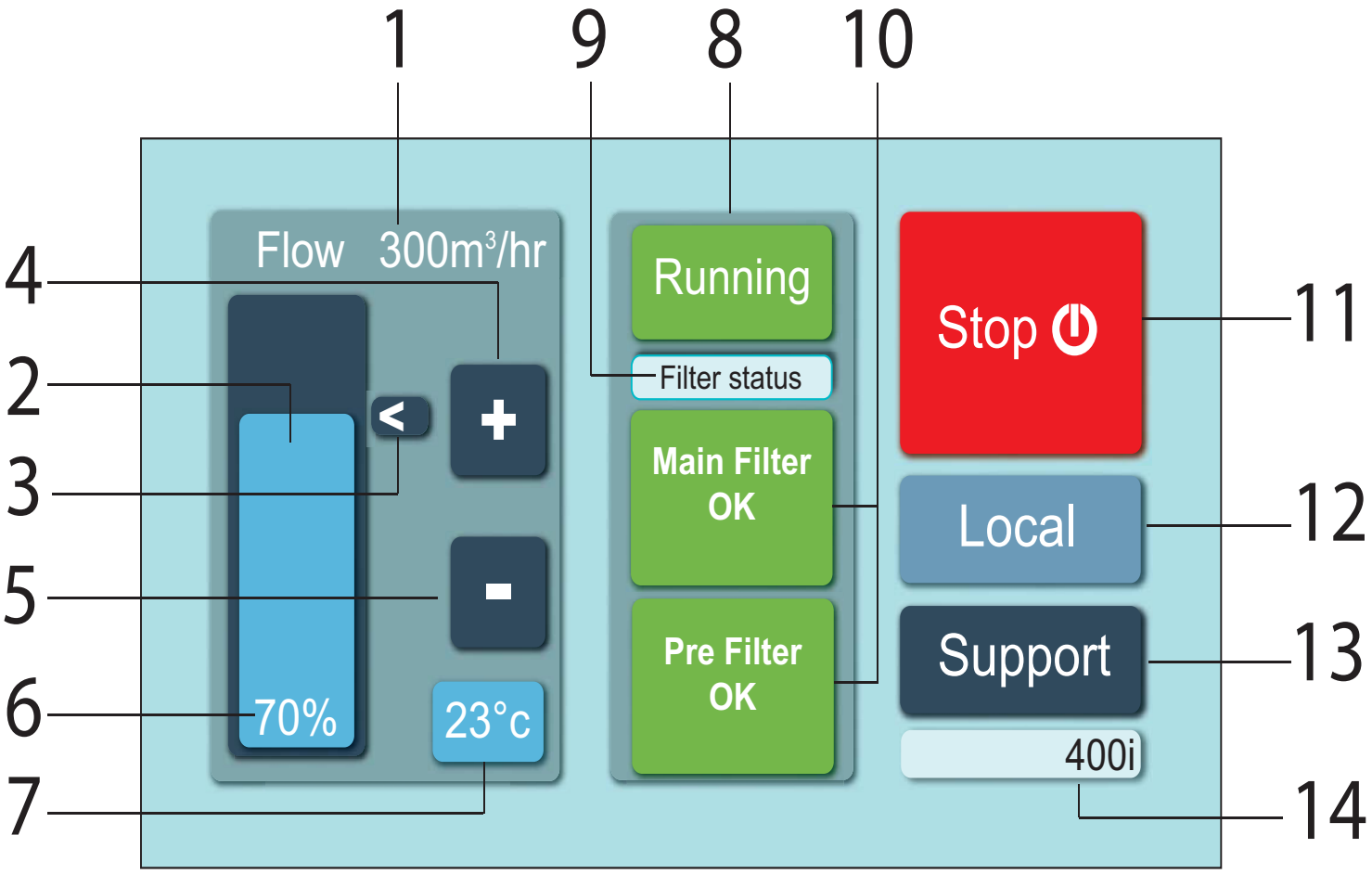

Touch Screen Display:

1: Actual flow rate
2: Actual flow indicator
3: Target flow indicator
4: Increase flow
5: Decrease flow
6: Motor capacity % used
7: Temperature
8: Running / Stopped indicator
9: Filter status indicator
10: Filter status indicators
11: Stop / Start button
12: Local / Remote indicator
13: Support button
14: Machine model

Actual flow rate (1)

This shows the actual flow rate being achieved and can be displayed as either M^{3}/h (metres cubed per hour) or CFM (cubic feet per minute).

Actual flow indicator (2)

This shows the actual flow is achieving its target.

Taget flow indicator (3)

This shows the target position that the actual flow indicator has to reach.

Increase/Decrease flow (4+5)

The “+” button increases the set point by raising the target flow indicator.
The “-” button decreases the set point by lowering the target flow indicator.

Motor speed (6)

This is a real time indication of motor speed shown as a percentage, from 0-100%.

Temperature (7)

This is the exhaust air temperature. If the air temperature rises above the factory preset limit the machine will give an intermittant audiable alarm and the temperature indicator will turn yellow.
If the temperature continues to increase an audiable alarm will repeat and the temperature indicator will turn red.

Running / Stopped indicator (8)

The run indicator displays status of the motor.
It will also indicate motor failure and hose blocked alarms.

Filter status indicator (9)

The message bar displays if gas or particulates are passing through the filters.

Filter status indicators (10)

The filter status indicators independently monitor filters, recognising the specific filter with the issue.

Stop / Start button (11)

Use this button to stop and start the machine manually.

Local / Remote indicator (12)

This shows if the extractor is controlled through an interface connection. It will display “Remote” when running, locking the stop/start button from the operator. If the interface is not controlling the extractor, the indicator will show “Local” allowing user operation of the screen.

Support button (13)

Button for accessing the support screen

Machine model (14)

Displays the model number of the machine.

Max Flow:

Ensure the machine is fitted with the connection kit or attached to ducting. In order to acheive the maximum efficiency from your extractor and filter set the max flow as follows.

Ensure the system is set up as it would be running normally, with any valves on extraction arms open, and nothing to cause an obstruction.

- Press the “Support” button.
- Press the “Setup” button.
- Enter code “2603”.
- Press the “Enter” button.
- Press the “Set Max” button. The machine will now run for approximately 10 seconds.
- Press the “Back “ button to return to the main screen.

The Extractor has now checked the system and calibrated the machine to give the most efficient extraction and filter life possible, it is ready to use.

SETTING THE MACHINE FOR THE FIRST TIME

Switching the machine ON/OFF

To switch the machine **ON** press the green ’**Start**’ button on the touch screen display. The button will turn red and display the next button available, “Stop”. “Running” will also appear on the display, and the actual flow indicator on the left side of the screen will meet the target flow indicator.

Adjusting the airflow rate

To adjust the airflow press the **“+” button** to increase the airflow, or the **“-” button** to decrease the flow rate.
The actual flow indicator bar will rise or fall to meet the required target flow.

The actual airflow measurement is shown on the display above the actual flow indicator.
Motor speed is shown as a percentage at the bottom of the flow indicator.

What airflow rate to set?

Each machine is factory set at 50% of its capacity. Check the fumes are being removed by site observation and appropriate measurement. Then increase or decrease the flow rate as appropriate. Please note that setting the flow level unnecessarily high may reduce filter life.

Special features:

The special features can be customised in the setup screen.

To access the set up menus:

- Press the “Support” button.
- Press the “Setup” button.
- Enter code “2603”.
- Press the “Enter” button.

Alarm NO / Alarm NC — Press this button to change the alarm relay state from normally open to normally closed.

Metric / Imperial — Press this button to convert all units between metric and imperial settings.
Metric settings will display the flow rate as M^3/h and the temperature as centigrade. Imperial settings will display the flow rate as CFM and the temperature as fahrenheit.

Lock Off / Lock On — Locks buttons 4 & 5 on page 8.

Edit Settings — Engineer setting only. Please contact your supplier for assistance.

Run on timer

This is only for machines using the interface connection (process controlled units e.g. lasers). When the process (e.g. laser) finishes, the iFume remains on for the amount of seconds indicated.

Back — Press this button to go back to the previous screen.

Full user lockout

It is possible to prevent any user or operator from pressing the stop/start button or changing the flow using the + and - buttons. The iFume will be controlled by a process controlled unit, such as a laser.
Connect the iFume to the process controlled unit (e.g laser) using a Purex interface cable. Set the required flowrate then select the “Lock On” button as above.

ENSURE ALL FILTERS ARE FITTED CORRECTLY PRIOR TO USING THE MACHINE.

DO NOT LIFT THE FILTERS USING THE HANDLES, THESE ARE ONLY TO BE USED FOR SLIDING THE FILTERS OUT OF THE MACHINE.

Important note:

Always check the extraction nozzle, flexible hose, pipework and the air inlet for debris build up before changing any filter. This avoids false alerts related to airflow.

Replacing filters

The touchscreen will display “Order Main Filter” and/or “Order Pre-Filter” when the filters are partially blocked, please contact your supplier to order filters.
The touchscreen will then display “Replace Main Filter” and/or “Replace Pre-Filter” when the filters are blocked, change the filters immediately.

Changing filters

The machine will warn you with audible and visible alerts if a filter is exhausted (see warning and alarm signals). The display will flash the icons of the filters which need attention. Take care when removing main filters as they are heavy. Always wear the protective gloves and mask provided and dispose of used filters in the bag provided. Protective eyewear should also be worn when changing filters.

Pre-filter pad

Opening the filter compartment door

- Ensure your process is stopped
- Switch off your Purex machine at the control panel (see Touchscreen control system)
- Turn the door lock/s on the front of the filter compartment door
- Open the door

Changing the pre-filter

200/400/800 - Always change the pre-filter first (unless recently changed) and restart the machine. If the alert continues, change the main filter. To remove the pad, first remove the main filter and turn it over (*See Changing the main filter*). Remove the pad and replace it with a new one. Make sure the harder, smoother side of the pad is facing the main filter. Turn the filters the correct way round and place back in to the extractor. (See picture “Pre-filter pad” above).

200i/400i/400i PVC/300i/800i - All have Labyrinth pre-filters which can be removed by pulling the filter off the air inlet inside the machine before replacing with a new one. 400i PVC machines also have an adsorbent pad in the base of the machine underneath the Labyrinth filter. This should be replaced at the same time as the Labyrinth filter. It is also good practice to wipe the inside of the machine periodically with a cloth to avoid build up of liquid. Suitable protective clothing should always be worn.

Changing the main filter

- Open the door
- Turn the filter locking handle (5) 180º anti-clockwise so that it is horizontal and in the filter unlocked position
- The filter (3) should drop slightly to allow release
- Remove the filter by sliding it towards you and remove it completely from the machine
- Insert the new filter (completely) into the machine ensuring that the airflow arrow on the label (6) is pointing up.
- Turn the filter locking handle 180º clockwise so that it is horizontal and in the filter locked position
- Close and lock the door and restart the machine

Notes: The 800i 3-tier has two main filters, always ensure you are replacing the correct one.

FILTRATION & CHANGING FILTERS

200
400

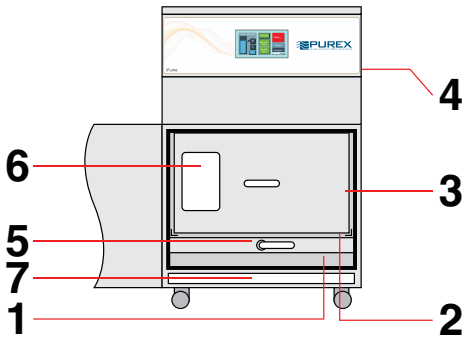

200i
400i
400i
PVC

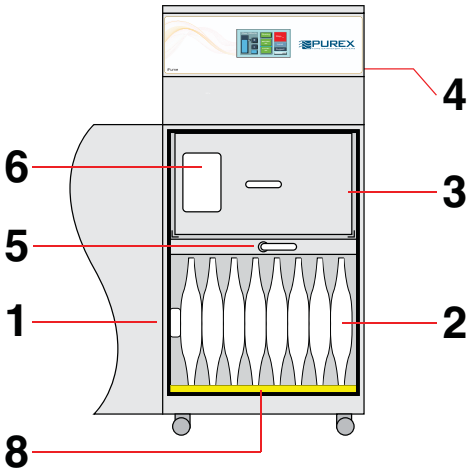

PVC versions include an adsorbent pad under the prefilter.

300i

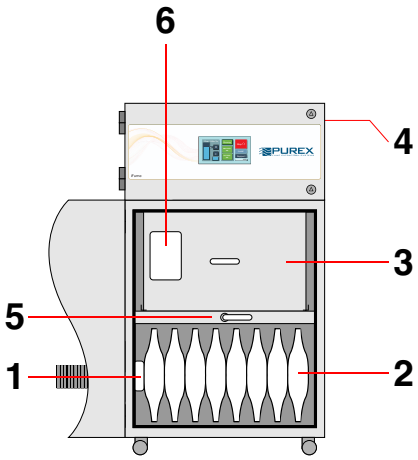

800i

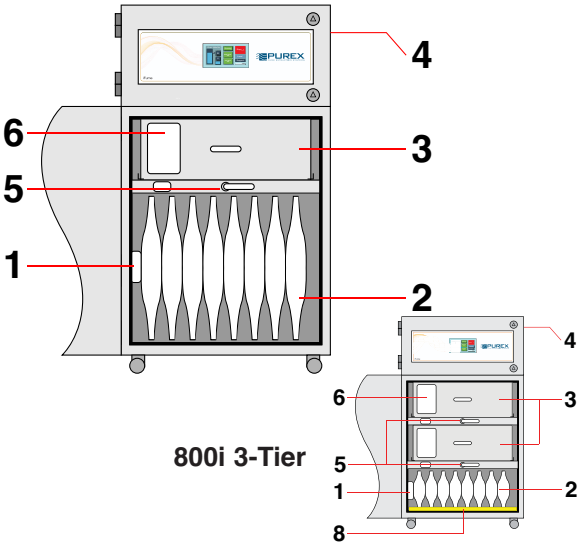

PVC versions include an adsorbent pad under the prefilter.

LEGEND:
1) Air inlet.
2) Pre-filter.
3) Main Filter.
4) Clean air returned to workplace.
5) Filter locking handle.
6) Filter identification label.
7) Debris tray.
8) Absorbant pad (PVC versions only).

All machines are mounted on four castors for increased mobility.

800
800i
PVC

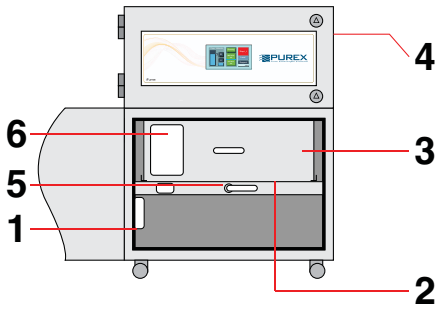

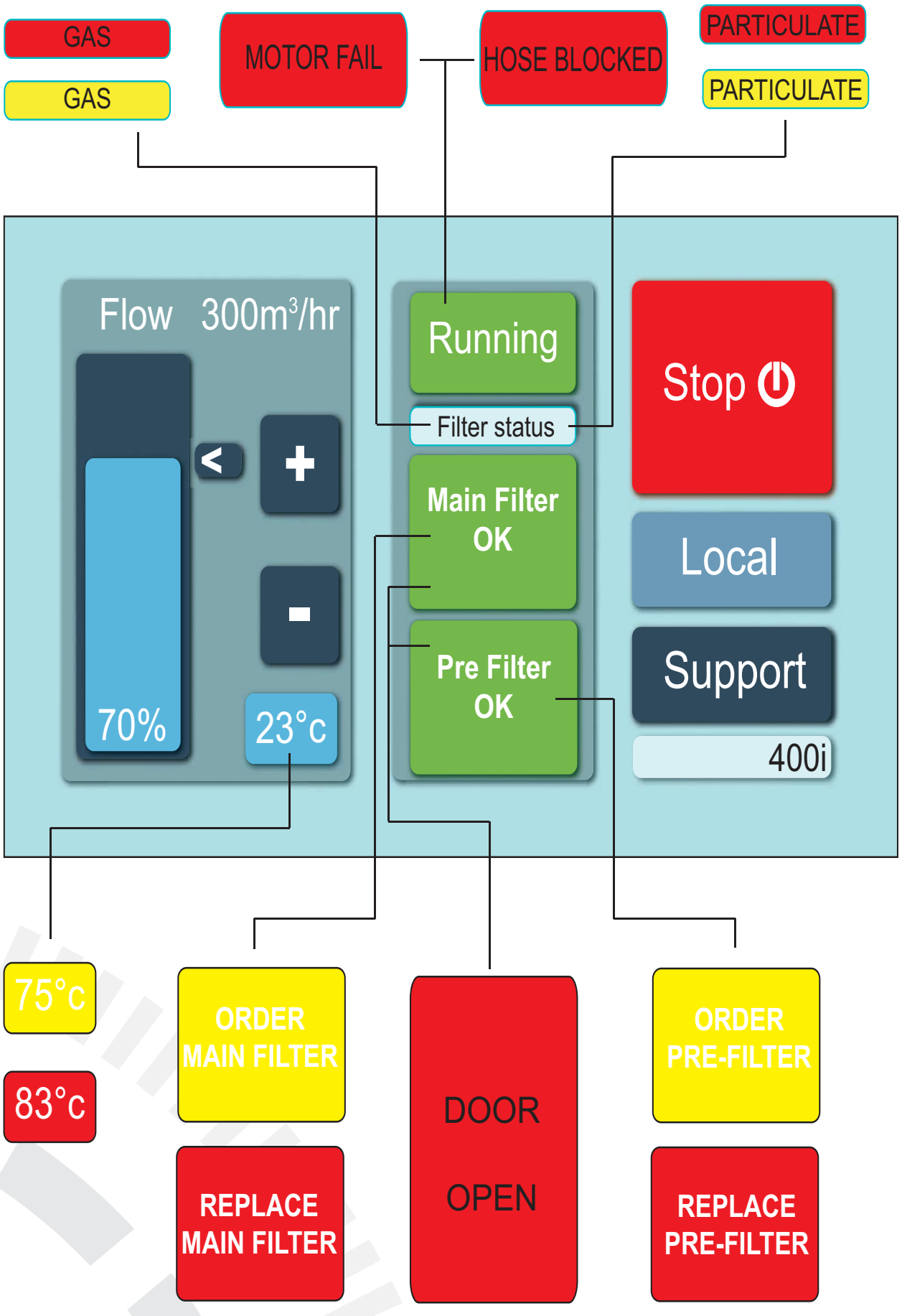
GAS
GAS
MOTOR FAIL
HOSE BLOCKED
PARTICULATE
PARTICULATE
Flow 300m³/hr
70%
23°c
Running
Filter status
Main Filter OK
Pre Filter OK
Stop
Local
Support
400i
75°c
83°c
ORDER MAIN FILTER
REPLACE MAIN FILTER
DOOR OPEN
ORDER PRE-FILTER
REPLACE PRE-FILTER

WARNINGS AND ALARMS:

Indicator	Problem	Action
Motor Fail	Indicates that the motor has failed in the extractor	Contact your supplier.
Hose Blocked	Indicates the hose connection is obstructed	Remove all connection hoses and check for obstructions. Check that any valves in the system are in the open position and have not been closed accidently.
Door Open	Indicates that a door to a filter compartment is open	Check that all filter compartment doors on the extractor are closed, check for obstructions preventing the doors from closing.
GAS (Yellow)	Indicates Gas warning (yellow)	Order replacement main filter.
GAS (Red)	Indicates Gas alarm (red)	Replace main filter.
Particulate (Yellow)	Indicates Particulate warning (yellow)	Order replacement main filter.
Particulate (Red)	Indicates Particulate alarm (red)	Replace main filter.
Temperature (Yellow)	Temperature warning, the process air is too hot or the extractor is at risk of overheating	Check there is nothing blocking the cooling vents on the rear of the extractor. Check the process temperature.
Temperature (Red)	Temperature alarm, the process air is too hot or the extractor is overheating	Check there is nothing blocking the cooling vents on the rear of the extractor. Check the process temperature. Turn off extractor.

TROUBLESHOOTING

Indicator	Problem	Action
Odour or particles in exhaust air but there is no alert from the machine.	The exhaust monitor unit inside the machine may have developed a fault.	Check all cables and connections first. Then contact your supplier.
Airflow insufficient to remove fume when the filter is not blocked.	Airflow set too low or possible airflow leak or a blockage.	Increase airflow. If problem persists then check all nozzles, hose/pipe connections and the vacuum sensor tube (if fitted) for leaks / blockages.
Control signal to/from interfaced equipment is incorrect. Equipment is not switched on alarm condition.	Electrical problem.	Check all cables and connections and interfaced equipment.
	The exhaust monitor unit inside the machine may have developed a fault.	Check all cables and connections first. Then contact your supplier.
	The control PCB inside the machine may have developed a fault.	Check all cables and connections first. Then contact your supplier.
	Relay state requires changing	See page 11 to change.
Screen is not illuminated.	Power supply absent or incorrect.	Check all cables and connections and ensure the power supply matches the requirements of the machine.
	Circuit breaker tripped.	Reset breaker on the rear of the machine.
	The control PCB inside the machine may have developed a fault.	Check all cables and connections first. Then contact your supplier.
A filter has a shorter than expected life.	A problem with the pre-filter can cause main filter life to be reduced.	Check the pre-filter which may be damaged or missing.
	The process may have changed or increased in duration. Are different materials being used?	Check if any factors have changed. If the problem persists then contact your supplier.
Circuit breaker tripped or fuse blown on power supply.	May indicate a serious fault.	Consult your supplier.

Useful Contacts:

Press the “Support” button on your touchscreen.

Purex International Limited

E: support@purex.co.uk
T: +44 (0)1405 746 030

Purex Incorporated

E: orders@purexinc.com
T: +1 847 348 5203 or +1 866 360 5675

TERMS & CONDITIONS

1. Contract
1.1 All quotations given, orders accepted and contracts entered into by Purex International Limited ("Purex") with any person ("Purchaser") for supply of goods ("Goods"), or for services ("Services") are subject to these conditions of sale ("Conditions"). All other terms and conditions, whether expressly stipulated by the Purchaser or implied by trade custom, course of dealing or otherwise are excluded. No variation to these Conditions will be effective unless agreed in writing by an authorised representative of Purex.

1.2 No quotation, estimate or proposal issued by Purex is an offer that is capable of acceptance by the Purchaser. Any order issued by the Purchaser shall be deemed placed subject to these Conditions and shall constitute an offer that Purex may accept or reject. The contract between Purex and the Purchaser ("Contract") shall be formed at the time Purex accepts the Purchaser's order. Purex may accept the Purchaser's order by issuing an order acknowledgement or by other means, including commencing the supply of Goods or the performance of Services. No amendments to the Purchaser's order shall be valid unless agreed in writing by an authorised representative of Purex.

2. Order and Specifications
The Purchaser shall be responsible to Purex for ensuring the accuracy of the terms of any order, including any applicable specification, submitted by the Purchaser, and for giving to Purex any necessary information relating to the Goods or Services within a sufficient time to enable Purex to perform the Contract in accordance with its terms. The specification for the Goods or Services shall be that set out in the Purchaser's order or as otherwise agreed in writing by Purex. Should an order be cancelled by the Purchaser within 2 months of the relevant delivery date Purex reserves the right to impose a reasonable cancellation charge.

3. Price and Payment
3.1 The price of Goods and Services shall be the price quoted by Purex. Quoted prices shall remain valid for 30 days. Prices do not include carriage and packing which will be charged at cost plus a handling fee unless otherwise specified in writing. Express or Special Delivery at the Purchaser's request will always be at the Purchaser's expense. Prices do not include VAT.

3.2 Unless otherwise agreed in writing payment of invoices shall be made in full without any deduction or set-off within 30 days of the invoice date. Payment shall be due whether or not property in the Goods has passed. Time for payment shall be of the essence. If the Purchaser fails to pay Purex any sum due pursuant to the Contract, the Purchaser shall be liable to pay interest to Purex on such sum from the due date for payment at the annual rate of 4% above the base lending rate from time to time of The Bank of England, accruing on a daily basis until payment is made, whether before or after any judgement. Purex reserves the right to claim interest under the Late Payment of Commercial Debts (Interest) Act 1998. Purex may also, without prejudice to any other remedy suspend or cancel further supply of Goods or performance of Services whether under this or any other Contract until the Purchaser makes payment in full together with any applicable interest.

4. Delivery
4.1 Delivery of the Goods shall unless otherwise agreed be made by Purex delivering the Goods to the location specified in the Purchaser's order or by the Purchaser collecting the Goods at Purex's premises.

4.2 Any dates or times for delivery of Goods and performance of the Services are approximate only. Purex shall use reasonable endeavours to meet such dates or times but so long as it uses such reasonable endeavours Purex shall not be liable to the Purchaser, in contract, tort, negligence or otherwise for any loss or damage whatsoever resulting from any late delivery or performance

4.3 Where the Goods are delivered by instalments, any breach by Purex in respect of any one or more instalments shall not entitle the Purchaser to terminate the Contract in whole or in part.

4.4 Upon receipt of the Goods the Purchaser shall examine them and shall within 48 hours of such receipt give notice in writing to Purex of any apparent defects and/or shortages. The parties will agree between themselves such further action as may be necessary to remedy the defect and/or shortage. Purex shall not be liable for any such defects and/or shortages notified to it after the period of 48 hours after receipt.

5. Risk and Title
5.1 Risk of damage to or loss of the Goods shall pass to the Purchaser when Purex delivers the Goods to the Purchaser or, if the Purchaser collects the Goods from Purex, when the Goods are loaded onto transport at Purex's premises.

5.2 Notwithstanding the passing of the risk, Purex shall retain title to and ownership of the Goods until it has received payment in full of all sums due for the Goods.

5.3 Until title in the Goods has passed to the Purchaser, the Purchaser shall be in possession of them as a bailee of the Goods for Purex and shall store the Goods, properly insured and protected, separately from any Goods belonging to the Purchaser or any third party and shall be clearly marked and identifiable as being Purex's property. Purex shall be entitled to enter the Purchaser's premises upon reasonable notice to verify the Purchaser's compliance with this clause. If the Purchaser fails to make any payments to Purex when due, or any of the circumstances set out in Clause 8.2 arise, then Purex will have the right, without prejudice to any other remedies:
5.3.1 to enter, without prior notice, any premises where Goods owned by Purex may be, and to repossess and dispose of any such Goods; and/or
5.3.2 to require the Purchaser not to resell or part with possession of any Goods owned by Purex until the Purchaser has paid in full all sums due to Purex under this or any other Contract.

5.4 The Purchaser shall not be entitled to pledge or in any way charge by way of security for any indebtedness any of the Goods which remain the property of Purex and if the Purchaser does so all monies owing by the Purchaser to Purex shall (without prejudice to any other right or remedy of Purex) forthwith become due and payable.

6. Warranty & Liability
6.1 Goods manufactured by Purex : Purex warrants that the Goods manufactured by it will be free from defects in materials and workmanship for a period of 12 months from the date of installation or 15 months from the date of despatch from Purex's premises, whichever period expires earlier. Exceptions :
Spare parts including replacement filters : 3 months from installation or 4 months from despatch
Used and ex-demonstration equipment: 3 months from installation or 4 months from despatch
In the case of any breach of warranty then Purex shall at its option remedy such defects or refund such sums as the Purchaser has paid to Purex in respect of such Goods. Purex shall be under no liability under the above warranties:
6.1.1 arising from any drawing, design or specification supplied by the Purchaser;
6.1.2 arising from improper installation, storage, use, modification or operation including but not limited to the use of consumable items not approved by Purex;

6.2 Goods manufactured by third parties : Purex will use its best endeavours to obtain for the purchaser the benefit of any warranty provided by the original manufacturer of the Goods. Repair or replacement, in whole or in part, of Goods which fail due to faulty manufacture is available from the original manufacturer under its warranty. Purex must be consulted to approve the return of Goods for replacement or repair under the original manufacturer's warranty.

6.3 All replacement items will be charged at the point of despatch. Provided the original items are received back at Purex within 28 days from the date upon which the Returns Authorisation Number is issued and Purex agree following testing / inspection that these are defective, a credit note will be issued.

6.4 Services : Purex warrants that it will carry out the Services with reasonable care and skill. If Purex is shown to be in breach of this warranty in respect of particular Services it shall at its option and cost either re-provide those Services or refund any sums already paid in respect of those Services.

6.5 Purex does not exclude or limit its liability in negligence for death or personal injury, or for fraud or wilful default, or otherwise to the extent that any exclusion or limitation of its liability is void, prohibited or unenforceable by law.

6.6 Subject to Clauses 6.1 - 6.5, all representations, warranties and conditions implied by trade custom, course of dealing, statute, common law or otherwise are excluded to the fullest extent permitted by law.

6.7 Subject to Clause 6.5, in no circumstances shall Purex be liable to the Purchaser, in contract, tort, negligence or otherwise, for any incidental or consequential loss including, without limitation, any loss of profit, business, revenue, goodwill or anticipated savings or for any special, exemplary or consequential damages or other financial loss whatsoever arising out of or in connection with the Contract or the supply of the Goods or Services or their use or resale (if applicable) by the Purchaser.

6.8 If notwithstanding the provisions of these Conditions Purex is found liable for any loss suffered by the Purchaser arising in any way out of or in connection with the Contract or the supply of any Goods or Services, that liability shall in no event exceed the price paid for such Goods or Services.

6.9 The parties hereby confirm that notwithstanding any other provision of the Contract or these Conditions, the Contract shall not and shall not purport to confer on any third party the right to enforce any term of the Contract for the purposes of the Contracts (Rights of Third Parties) Act 1999.

6.10 Purex and third party Software
6.10.1 Software is licensed (or sublicensed, in case of third party Software) by Purex to the Purchaser.
6.10.2 Purex warrants that the media on which the Software is recorded is free from defects in material and workmanship under normal use for a period of thirty days from the date of despatch.
6.10.3 Purex warrants that any Purex Software will perform in substantial compliance with the specification for a period of 90 days from installation.
6.10.4 Purex warrants that any third party Software will perform in substantial compliance with the Software documentation issued by the original manufacturer of the Software and for the period specified therein.
6.10.5 Purex (and, where applicable, the original manufacturer of the Software) do not warrant that the functions contained in the Software will meet Purchaser's requirements or operate in the combination that may be selected for use by Purchaser, that the operation of the Software will be uninterrupted or error-free or that all defects in the Software will be corrected.
6.10.6 The entire liability of Purex (and, where applicable, of the original manufacturer of the Software) shall be, at Purex's option, either :
(a) Return of all sums paid by the Purchaser for the Software, or
(b) Replacement of the Software or media that does not meet Purex or the original manufacturer limited warranty and which is returned to Purex under its return policy.
6.10.7 Any replacement Software or media will be warranted for the remainder of the original warranty period or 30 days, whichever is longer.

7. Force Majeure
Purex shall not be deemed in breach of the Contract or otherwise liable to the Purchaser, by reason of any delay in performance, or non-performance of its obligations under the Contract to the extent that such delay or non-performance is caused by an event or circumstance beyond Purex's reasonable control. In such events Purex may, without liability to the Customer, reasonably vary the terms of the Contract including but not limited to extending the time for performing the contract by a period of at least equal to the time lost due to such an event.

8. Termination
8.1 Purex may at any time by notice in writing to the Purchaser terminate the Contract with effect from the date of service of such notice if:
8.1.1 The Purchaser commits a material breach of the Contract and fails to remedy such breach within 14 days after Purex has given written notice to the Purchaser identifying the breach and requiring it to be remedied; or
8.1.2 The Purchaser is unable to pay its debts as they fall due within the meaning of Section 123 of the Insolvency Act 1986 or if any petition is presented for the appointment of an administrator or receiver or trustee in bankruptcy in respect of the Purchaser or any part of its undertaking or assets or an administrative receiver is appointed in respect of any of the Purchaser's undertaking or assets or if the Purchaser makes or attempts to make any arrangement with or for the benefit of its creditors or if the Purchaser ceases or threatens to cease to carry on business.

9. Miscellaneous
9.1 The expressions "in writing" and "written" include fax transmission. Purex shall be entitled to sub-contract any or all of its obligations under the Contract and to assign the Contract and the Customer shall at Purex's cost do all such things as may be necessary to enable Purex to so assign the Contract. Any failure or neglect by Purex to enforce at any time any provision of the Contract shall not be construed nor deemed to be a waiver of any of Purex's rights under the Contract. The Contract shall be governed by and construed in accordance with English law and the parties hereby submit to the exclusive jurisdiction of the English courts in relation to any claim or controversy arising out of or connected with the Contract.

9.2 New Accounts : Credit accounts cannot be opened under the minimum amount in operation at the time of placing the order. Customer's wishing to open a credit account must furnish two trade references and a Bank reference.

9.3 Specification Alterations : Purex reserves the right to alter the specification of any goods without prior reference to the Purchaser provided that the goods comply in all other known respects with the Purchaser's requirements.

9.4 Trade-Marks / Patents : The supply of goods by Purex shall not confer any right upon the Purchaser to use any Purex trade-mark without prior written consent of Purex and at all times such trade-mark shall remain the property of Purex. Neither does it imply any right to use any Purex patent or any indemnity against infringement of third party patents.

9.5 Catalogues : Catalogues and other advertising matter are issued to indicate the type and range of goods we offer and no particulars therein are binding to Purex.

Register your equipment!

To gain free extended

warranty

Register online at
www.purex.co.uk/product-registration
to receive 18 months
instead of the standard

12 months warranty

(Registration must be within 4 weeks of receipt of machine, see terms & conditions)

Purex International Limited., QWP House, Capitol Park, Thorne, DN8 5TX, UK
T +44 (0)1405 746 030 F +44 (0)1405 746047 W www.purex.co.uk
E purex@purex.co.uk

Registered Office. Purex International Ltd. QWP House, Capitol Park, Thorne, Doncaster, DN8 5TX.
Registered No. 5136616 England. V. GB842 5025 49

Purex Incorporated, 2246 Palmer Driver, Suite 108, Schaumburg, Illinois 60173, USA
T +1 847 348 5203 W www.purexinc.com E purex@purexinc.com

Registered Office. Purex Inc., 2246 Palmer Driver, Suite 108, Schaumburg, Illinois 60173, USA.
Registered No. 5136616 England. V. GB842 5025 49

Purex International Limited.
QWP House,
Capitol Park,
Thorne,
Doncaster,
DN8 5TX
UK
T: +44 (0)1405 746 030
F: +44 (0)1405 746 047
E: purex@purex.co.uk
W: www.purex.co.uk

Purex Incorporated
2246 Palmer Drive, Suite 108,
Schaumburg,
Illinois 60173
USA
T: +1 847 348 5203
E: purex@purexinc.com
W: www.purexinc.com

PUREX
FUME EXTRACTION SYSTEMS

Registered Office. Purex International Ltd. Unit 5, Capitol Park, Thorne. DN8 5TX Registered No. 5136616 England.
VAT No. GB842 5025 49 | WEEE Producer Registration Number: WEE/CE0067TX